Flara™ Technical Specification
YB0361
1-Globe Light Fixture

Dimensions:

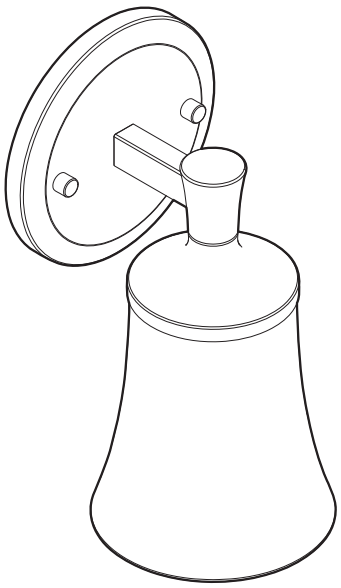

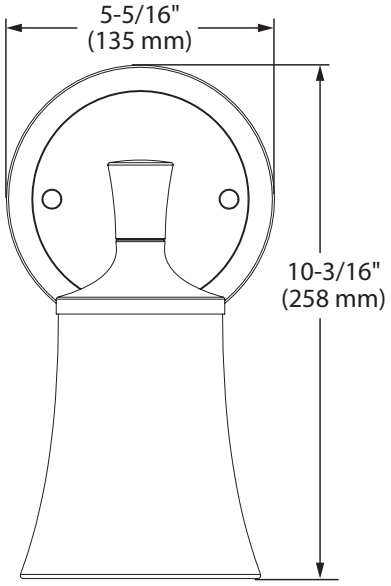

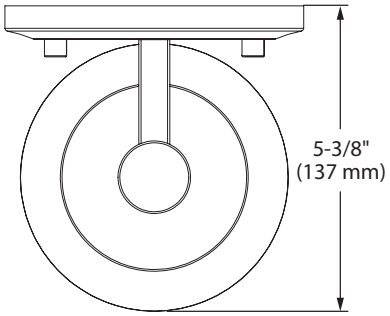

Product Information:

Stock Numbers:	YB0361CH – CHROME YB0361BN – BRUSHED NICKEL YB0361NL – NICKEL
Globe Service Kit:	YB0369
Materials:	Zinc, glass
Voltage:	120v
Bulb:	100w max (not included); medium base
UL Listed:	Yes – for dry locations
Important Notes:	Turn off power during installation. Do not connect or disconnect under load.
Cleaning Notes:	Clean only with a soft damp cloth. Do not use commercial or abrasive cleaners.

Stock Number:_____

Light Fixture By Moen Incorporated

MOEN®

25300 AL MOEN DRIVE • NORTH OLMSTED, OH 44070
CORPORATE HEADQUARTERS: (800) 321-8809 • FAX: (800) 848-6636
INTERNATIONAL: (440) 962-2000 • FAX: (440) 962-2726
CUSTOMER SERVICE (USA): 800-882-0116 • FAX: (888) 379-2720
WWW.MOEN.COM
©2019 Moen Incorporated.

12/18/2019 SPC15927 5000038525
Released 00